Product Fiche

Supplier name	Arada
Product Code	ECB5FPLUSsn
Energy Efficiency Class (wood)	A+
Direct Heat Output (wood)	4.9 kW
Indirect Heat Output (wood)	N/A
Energy Efficiency Index (wood)	107.4
The useful energy efficiency at nominal heat output and at minimum load (wood)	80.3 %

Specific precautions that shall be taken when the local space heater is assembled, installed or maintained:
Product should be installed in accordance with local building regulations.
Appliance will become very hot during use.

Dimensions

Width	431 mm
Height	550 mm
Depth	365 mm
Flue Diameter	127 mm
Height of stand	136 mm
Height of pedestal	N/A
Height of log store	386 mm
Total height on stand	686 mm
Total height on pedestal	N/A
Total height on log store	936 mm
Height to centre of rear flue	431 mm
Depth from back to centre of top flue	102 mm
Ideal log length	300 mm

Features

Flexifuel	Yes
Stove body type	Freestanding
Ecodesign Ready	No
Suitable for smoke control areas	Yes
Suitable for direct air connection	No
Suitable for non-combustible 12mm hearth	Yes
Max hearth temperature	58.3 °C
Weight gross (packed weight)	68 Kg

Boiler Tapping Measurements

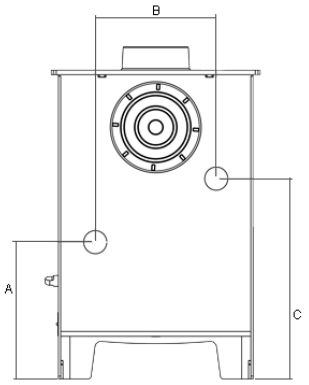

Add In boiler tapping measurements. Rear View example shown. Not to scale.

A	B	C
255 mm	264 mm	347 mm

Performance – Wood Fuel

	Wood Fuel
Energy Efficiency Class	A
Nett Efficiency	80.3 %
Nominal Output	4.9 kW
Mean Co Emission (@13% O2)	0.39 %
Mean Co2 Emission(@13% O2)	-
DIN+ particulate	-
Mean NOx Emission (@13% O2)	-
Mean OGC Emission(@13% O2)	-
Flue Gas Mass Flow	4.4 g/s
Flue Gas Temperature	306 °C

Minimum distance to combustibles

To Rear	To Side	Above
375 mm	300 mm	381 mm

We recommend this appliance is installed with clearance of 100mm to non-combustible materials
Installation and operating instructions for this stove are available online at www.aradastoves.com.